Electro Standards Laboratories
ADVANCED SYSTEMS DESIGN & SERVICES

MADE IN USA

Fiber

SPECIFICATIONS
MODEL 4179-5M
(Cat. No. 304179-5M)

Fiber Model 4179-5M VersaLink to SC Multimode Duplex Fiber Converter

- *Allows Connection of Fiber Optic Linked Terminals to SC Multimode interface equipment.*
- *Provides Plastic Optical Fiber to Glass Optical Fiber conversion.*
- *Faster Data Transfer Rate, up to 5 Mbps.*

INTRODUCTION:

The Model 4179-5M is a very high speed ruggedized, protocol independent, SC Multimode Duplex Glass Fiber to Plastic Optical Fiber (POF) interface converter from Electro Standards Laboratories. Typical operating speeds are up to 5 Mbps. Designed to operate from -40°C to +85°C, it is a member of Electro Standards Laboratories' rugged community fiber-to-copper and fiber-to-fiber media converter family.

The unit features protection circuitry on the power interface. The unit's power input is protected from transients as well as over current and over voltage protection. Other features include user selectable fiber polarity, RX and TX indicator LEDs.

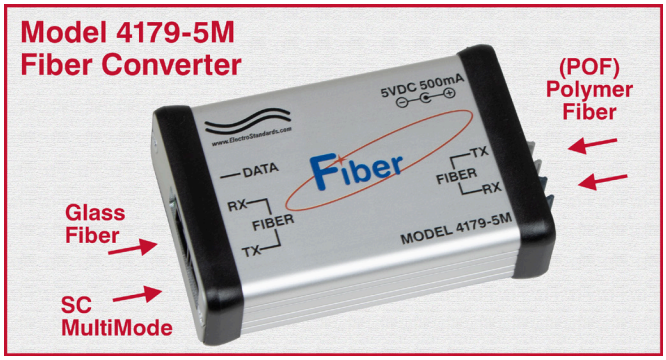

FEATURES:

- **Converts VersaLink plastic core (POF) cable interface to SC Multimode Duplex (glass) Fiber Optic interface.**
- Provides full galvanic isolation (no metallic connection) between connected devices.
- Full duplex connection between terminals network and data processing / communication equipment.
- **Faster Data transfer rate, up to 5 Mbps.**
- Plastic Fiber connection via standard VersaLink female connectors.
- SC Duplex fiber connections via two standard SC female connectors.
- LED Status light displays data transfer activity.
- Provided with external wall mount power supply, UL Listed, RoHS, LPS.

SPECIFICATIONS:

Plastic Fiber: (POF)

Cable Type: 1 mm plastic optical filament.
Wavelength: 660 nm (red).
Transmission Distance: 75 m (250 ft.) (POF).

Glass Fiber: SC Multimode Fiber

SC Fiber Cable: 50/125µ / 62.5/125µ, multimode.
SC Fiber Wavelength: 820nm/850nm, Multimode.
SC Fiber Transmission Distance: 4.5 km (2.8 miles).

External Power Supply (included with Model 4179-5M): 100 -240 VAC @ 50/60 Hz. UL Listed, RoHS, LPS (Cat No 529954)
Dimensions: 2.25" x 1.03" x 4.7" (58mm x 27mm x 120mm)
Weight: Approximately 0.3 Lb. (137 grams).

SC/SC Fiber Optic Cables - Multimode

Catalog Number	Length
986170-03 m	3 Meters
986170-05 m	5 Meters
986170-ANY m	Length in Meters

Versatile Link Plastic Core Cables - Multimode

Catalog Number	Length
986625-010	10 Feet
986625-020	20 Feet
986625-ANY	Length in Feet

MODEL 4179-5M APPLICATION: Fiber / SC Multimode Fiber Converter

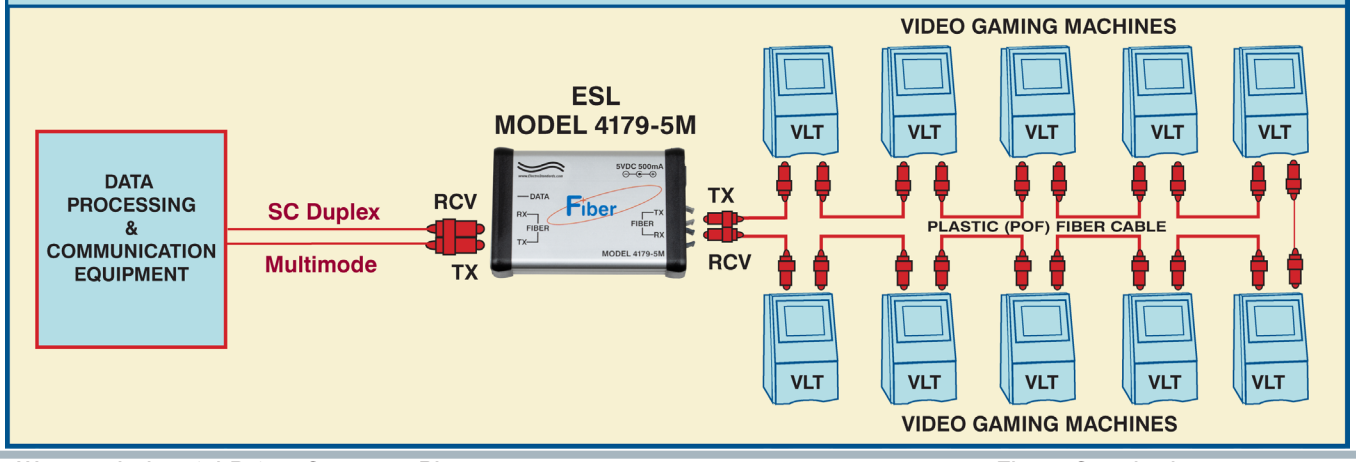

36 Western Industrial Drive, Cranston, RI 02921
Tel: 401-943-1164 Fax:401-946-5790
www.ElectroStandards.com
E-mail:eslab@ElectroStandards.com

Pub. 6784-02